Case and Related Parts 32RH (DGG)
Figure 32RH-210

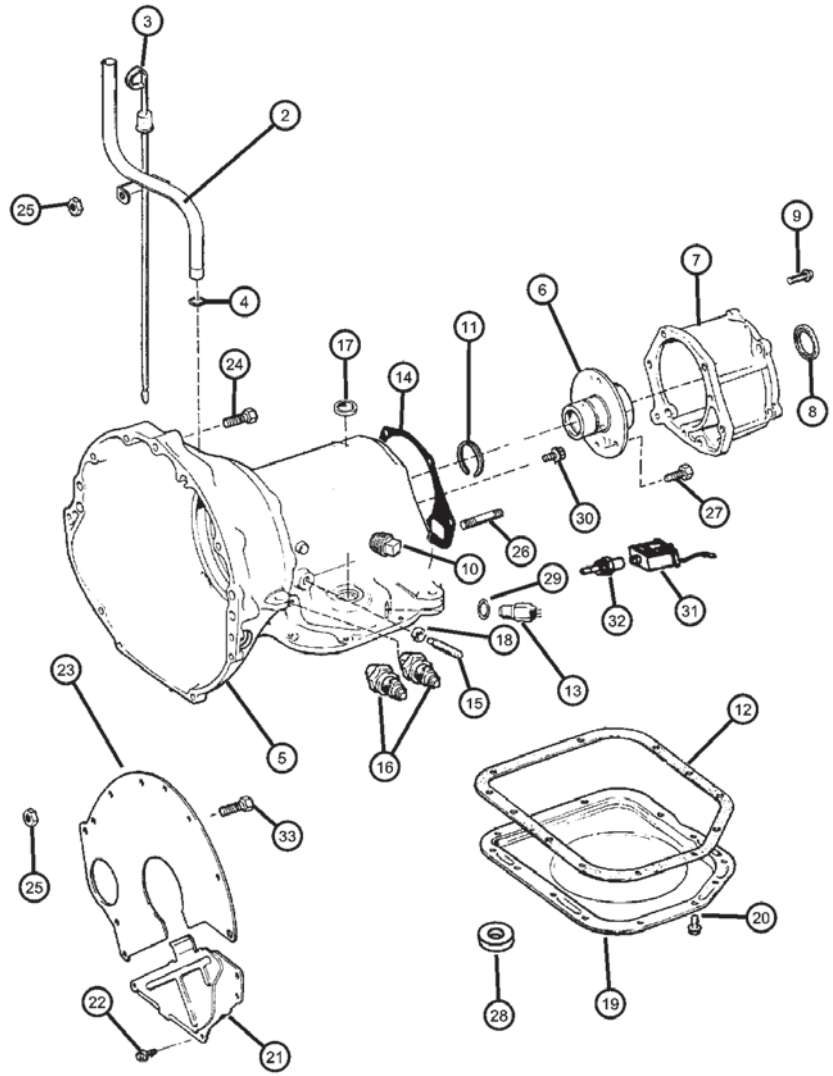

ITEM	PART NUMBER	QTY	LINE	SERIES	BODY	ENGINE	TRANS	TRIM	DESCRIPTION
Note:									
DDK = 5 Speed Heavy Duty Transmission									
DGG = 3 Speed Automatic Transmission 32RH									
DG0 = All Automatic Transmissions									
EPE = 2.5L SMPI Magnum 4 Cyl Engine									
EP0 = All 2.5L 4 Cyl Gas Engines									
ERH = 4.0L Power Tech Engine									
ER0 = All 4.0L 6 Cyl Gas Engines									
-1	04883957AC	1					DGG		SEAL AND GASKET PACKAGE, Transmission
2									TUBE, Transmission Oil Filler
	52104243AC	1				ER0	DG0		
	52104244AB	1				EP0	DG0		
3	52104240AB	1				EP0, ER0	DG0		INDICATOR, Transmission Fluid Level
4	52118629AB	1				EP0, ER0	DG0		SEAL, Oil Filler Tube
5	52118344	1					DGG		CASE, Transmission
6	04431433	1					DGG		SUPPORT, Output Shaft
7	52118076	1					DGG		ADAPTER, Transmission
8	04269956	1					DGG		SEAL, Adapter
9	06030849	5					DGG		SCREW AND WASHER, Hex Head Locking, .375-16x1.375
10	06028095	1					DGG		PLUG, Pressure Check
11	06033480	1					DGG		SNAP RING, Reverse Drum
12	04295875	1					DGG		GASKET, Oil Pan
13	56028181AB	1					DGG		SWITCH, Neutral, Safety, Back Up
14	02466954	1					DGG		GASKET, Transmission Case
15	06036141AA	1					DGG		SCREW
16	52028471	1					DGG		CONNECTOR, Oil Cooler Tube, .375 Tube x .25 Thread
17	04505098	1					DGG		SEAL, Manual Shift Valve, 1.25 OD
18	00124934	1					DGG		NUT, Hex Jam, .50-20
19	52118802	1					DGG		PAN, Transmission Oil
20	04723548	14					DGG		SCREW AND WASHER, Hex Head, .312-18x.625

WRANGLER (TJ)

SERIES	LINE	BODY	ENGINE	TRANSMISSION
H = Sport L = SE P = Sahara	J = Wrangler 4WD U = Wrangler 4WD (RHD)	77 = 93.4 WB	EPE = ENGINE - 2.5L POWER TECH I-4 Cyl. ERH = ENGINE - 4.0L POWER TECH I-6	DDD = TRANSMISSION - 5-SPEED HD MANUAL DDQ = TRANSMISSION - 5-SPEED MANUAL DGD = TRANSMISSION - 3-SPD. AUTOMATIC,30RH DGG = TRANSMISSION - 3-SPD. AUTOMATIC,32RH DG0 = All Automatic Transmissions DBB = All Manual Transmissions DD0 = All 5 Speed Manual Transmissions

Case and Related Parts 32RH (DGG)
Figure 32RH-210

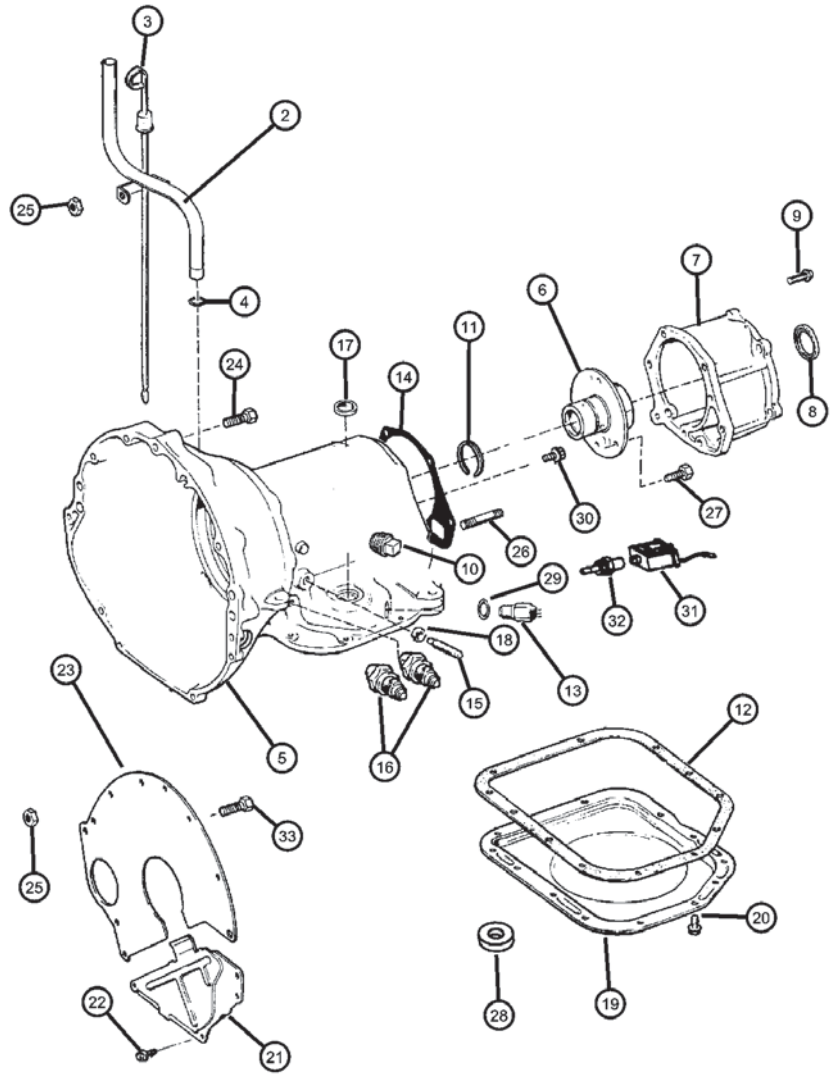

ITEM	PART NUMBER	QTY	LINE	SERIES	BODY	ENGINE	TRANS	TRIM	DESCRIPTION
21	52118136AB	1				ER0	DG0		COVER, Converter
22	06035031	3				ER0	DG0		SCREW AND WASHER, Hex Head, .312-18x.625
23	J3237847	1				ER0	DG0		SPACER, Clutch Housing
24	J4004370	2				ER0	DG0		BOLT AND WASHER, Hex Head, .437-14x2.75
25	J0219422	2				ER0	DG0		NUT, Hex
26	06033157	1					DGG		STUD, .375-16x2.312
27	06033479	6					DGG		BOLT, Hex Head, .25-28x1-5/8
28	03681601	1					DGG		MAGNET, Transmission
29	02408143	1					DG0		WASHER, Switch
30	06033616	5					DGG		SCREW, Hex Flange Head, .25-28x.875
31	52118595	1					DGG		SOLENOID, Transmission
32	56038235	1					DGG		CONNECTOR, Wiring
33	00153371	2				ER0	DG0		BOLT, Hex Head, .375-16x2.25

WRANGLER (TJ)

SERIES	LINE	BODY	ENGINE	TRANSMISSION
H = Sport L = SE P = Sahara	J = Wrangler 4WD U = Wrangler 4WD (RHD)	77 = 93.4 WB	EPE = ENGINE - 2.5L POWER TECH I-4 Cyl. ERH = ENGINE - 4.0L POWER TECH I-6	DDD = TRANSMISSION - 5-SPEED HD MANUAL DDQ = TRANSMISSION - 5-SPEED MANUAL DGD = TRANSMISSION - 3-SPD. AUTOMATIC,30RH DGG = TRANSMISSION - 3-SPD. AUTOMATIC,32RH DG0 = All Automatic Transmissions DBB = All Manual Transmissions DD0 = All 5 Speed Manual Transmissions