GEAR TRAIN, REVERSE IDLER, MANUAL TRANSMISSION SIX CYLINDER ENGINE 4.0L, 4.2L FIVE SPEED TRANSMISSION - AISIN MODEL AX15
Figure 21M-1000

8 J21 1000

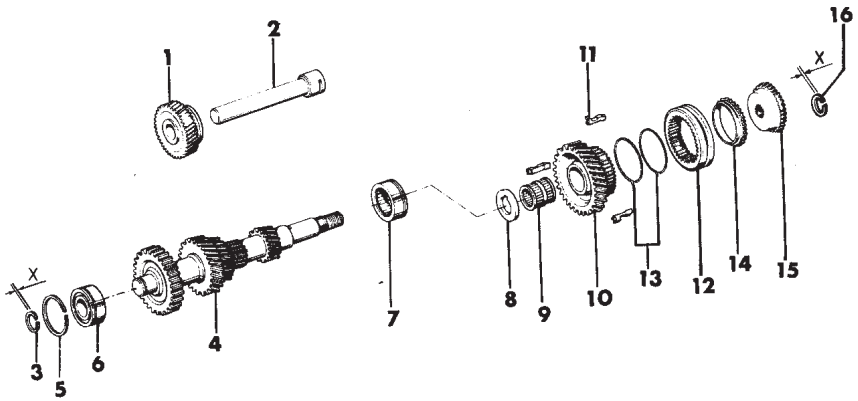

ITEM	PART NUMBER	QTY	BODY	MODEL	DESCRIPTION
11					KEY, Synchronizer No. 3
	83506256	3			Up to Transmission Serial No. 00705123
	04637532	3			After Transmission Serial No. 00705123
12	83506257	1			SLEEVE, Synchronizer No. 3
13	83506254	1			SPRING, Synchronizer No. 3
14					RING, Synchronizer No. 3, 5TH Gear
	83506253	AR			Up to Transmission Serial No. 00705123
	04637533	AR			After Transmission Serial No. 00705123
15	83506242	1			SPACER
16					RING, Snap 5th Gear
	83506260	AR			Stamped A (X=2.80mm)
	83506261	AR			Stamped B (X=2.85mm)
	83506262	AR			Stamped C (X=2.90mm)
	83506263	AR			Stamped D (X=2.95mm)
	83506264	AR			Stamped E (X=3.00mm)
	83506265	AR			Stamped E (X=3.05mm)
	83506266	AR			Stamped G (X=3.10mm)
	83506267	AR			Stamped H (X=3.15mm)

COMANCHE JEEP J10/J20 PICKUP TRUCK GRAND WAGONEER CHEROKEE WRANGLER (88J)

SERIES	LINE	BODY	ENGINE	TRANSMISSION
26 = J-10 Pickup-131" WB 27 = J-20 Pickup-131" WB 63 = Comanche 4WD-6 Ft Box 64 = Comanche 2WD-6 Ft Box 66 = Comanche 2WD-7 Ft Box 65 = Comanche 4WD-7 Ft Box 73 = Cherokee 2WD- 2 Dr. 74 = Cherokee 2WD- 4 Dr. 77 = Cherokee 4WD- 2 Dr. 78 = Cherokee 4WD- 4 Dr. 79 = Cherokee 4WD- 4 Dr.-Com. 75 = Wagoneer 4WD- 4Dr. 15 = Grand Wagoneer 4 Dr. 25 = J-10 Pickup-119" WB 81 = Wrangler 93" WB 82 = Wrangler 103" WB-Exp	J = Jeep	MJ = Comanche Pickup SJ = Grand Wagoneer Wgn., J-10 & J-20 Pickup XJ = Cherokee, Wagoneer Limited YJ = Wrangler	1 = N/A	1 = N/A

AR = use ase required - = Non illustrrated part

<< RETURN TO GROUP INDEX